XELA ROBOTICS

uSkin®
uSPa11, 21, 22

1 Overview

- Hall-effect-based tactile sensor
- Multi-taxel (distributed) sensing
- 3-axis force measurement per taxel
- Soft skin
- Up to 500 Hz of sampling rate
- Provides temperature data (e.g. for drift compensation)
- 2 different sensitivities (pre-programmed)

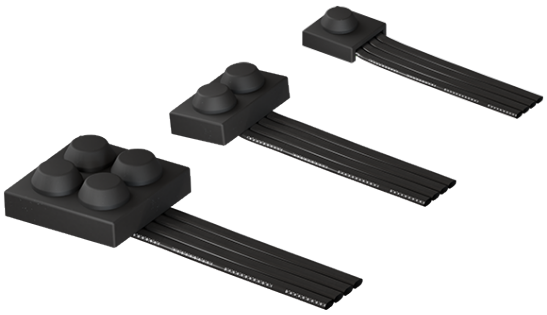

2 Technical specification

	uSPa11	uSPa21	uSPa22	
	Value			Unit
Power voltage (microcontroller)		5		V
Power voltage (sensor)		2.2–3.6		V
Current consumption (microcontroller)		11.6–26		mA
Current consumption (sensor)	6.1	7.9	17.3	mA
Sampling frequency	500	450–500	215–500	Hz
Dimensions (without cable)	7 × 7.5 × 4.7	11.1 × 6.3 × 4.7	11.1 × 11.1 × 4.7	mm
Measurement range (x & y) *2		± 8033		LSB
Measurement range (z) *2		+19099		LSB
Noise (x & y) *2		± 0.05		%
Noise (z) *2		± 0.05		%
Number of taxels	1	2	4	−−

*2 In case of sensitivity H

3 Multi-Sensor Connection and Sampling Rate

Up to 10 uSPa11, uSPa21, or uSPa22 sensor modules can be connected to a single XMC (XELA microcontroller) via a breakout board. The breakout board has the same footprint as the XMC and stacks directly on top of it. The breakout board is included in the pricing of the XMC. The sampling rate depends on the sensor model and the number of connected modules, as shown in Table 1.

Sensor model	1–5 modules	6–10 modules
uSPa11	500 Hz	500 Hz
uSPa21	500 Hz	450 Hz
uSPa22	500 Hz	215 Hz

Table 1: Sampling rate vs. number of sensor modules connected to one XMC

4 Sensitivity/ Resolution

uSPa11, uSPa21, and uSPa22 feature two distinct sensitivity settings denoted by the letters "L" or "H". This sensitivity configuration dictates the measurement range of the sensor. Detailed information regarding the sensor's response for a single sensing point (i.e., when force is applied to one taxel) is provided in Fig.1 and 2. The default setting for sensitivity across all standard models is "H". For inquiries regarding sensor modules with alternative sensitivity settings, please contact XELA Robotics.

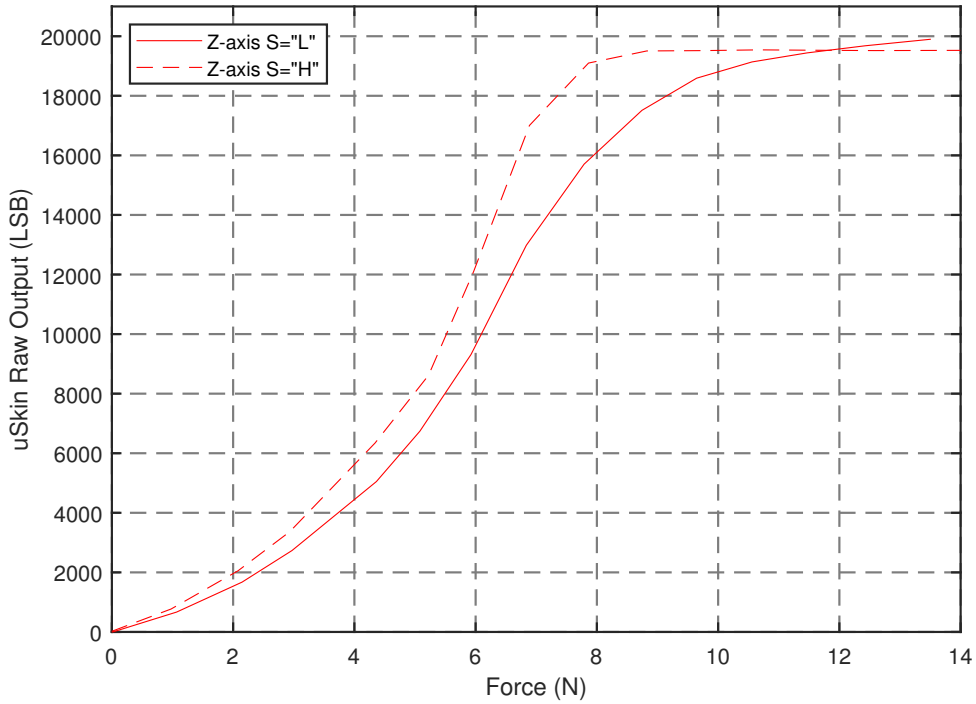

Figure 1: Sensor's normal force (z-axis) output with two sensitivity settings.

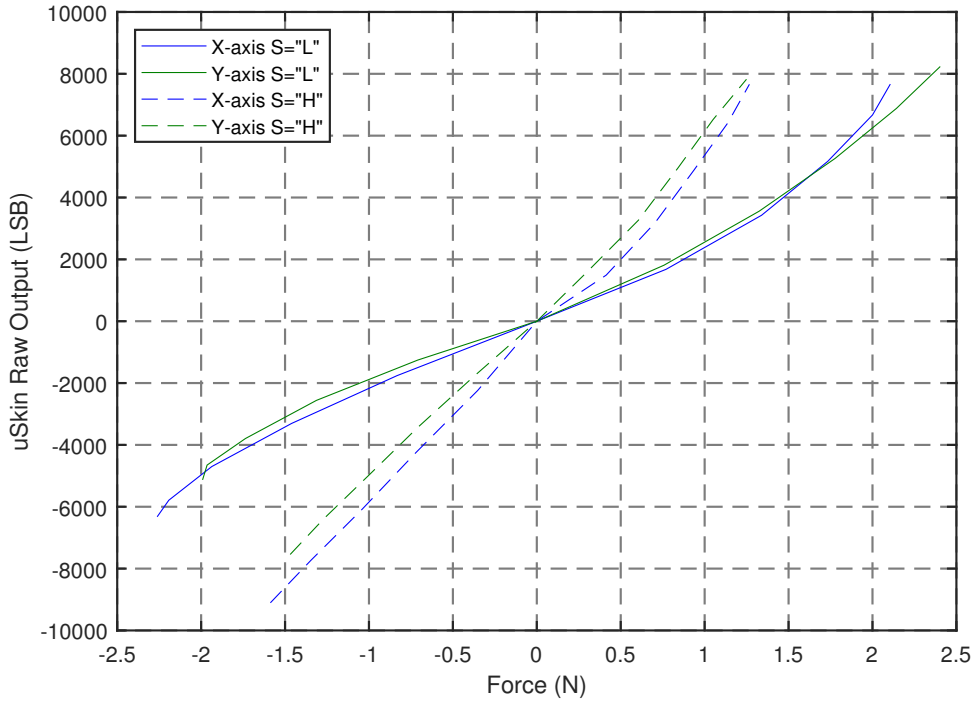

Figure 2:
Sensor's shear forces (x and y-axis) output with two sensitivity settings.

Sensitivity	Measurable Range				Resolution	
	Newton		LSB		N/LSB	
	x/y	z	x/y	z	x/y	z
L	±2.38	12.42	±6840	19679	0.00035	0.00063
H (default)	±1.53	7.86	±8033	19099	0.00019	0.00041

Table 2:
Summary of uSPa11, uSPa21, and uSPa22's maximum measurable force and resolution according to the selected sensitivity.

5 Maximum Signal to Noise Ratio

Figure 4 and 3 show the output noise band of uSPa11, uSPa21, and uSPa22 in two different sensitivity settings when there is no load applied. These 300 consecutive data for 3 seconds were used to calculate the noise of each axis which is represented in MSE (mean square error). The calculation result can be seen in Table 3.

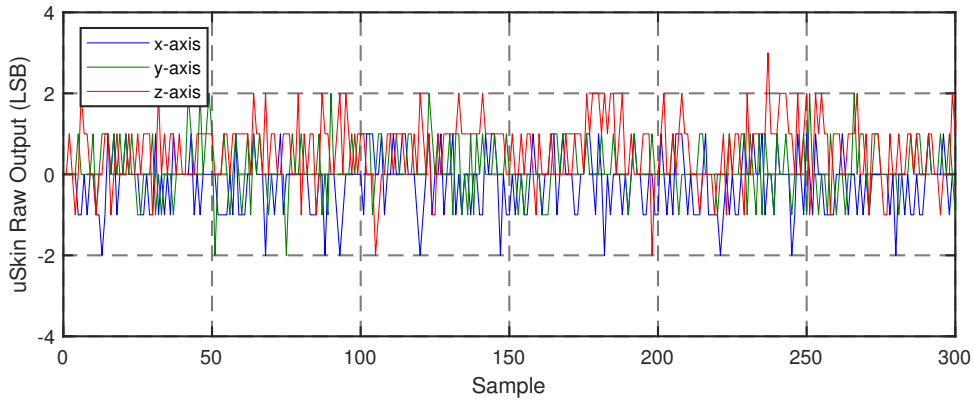

Figure 3: Output signal (low sensitivity) without load.

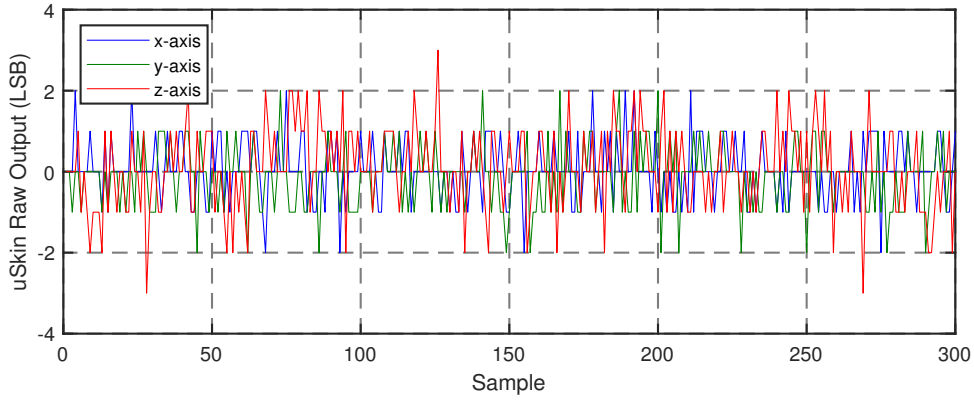

Figure 4: Output signal (high sensitivity) without load.

	Axis	MSE (LSB)	PSNR (dB)
Low	X/Y	0.55	79.30
	Z	0.98	85.96
High	X/Y	0.58	80.43
	Z	0.98	85.70

Table 3:
Peak signal to noise ratio of uSPa11, uSPa21, and uSPa22.

The (MSNR) peak signal to noise ratio of uSPa11, uSPa21, and uSPa22 was calculated by using equation 1. Here, MSE is the mean square error of 300 samples of uSkin reading when there is no load applied (see Fig. 4 and 3). MAX_I is the maximum measurable force (in LSB) taken from Table 2.

$$MSNR = 20 \cdot log_{10}(MAX_I) - 10 \cdot log_{10}(MSE) \tag{1}$$

6 Thermal Drift Compensation

The internal temperature of uSkin will rise after running the sensor for several minutes. As a result, uSkin sensor's output will also drift over time. As seen in Fig. 5, the z-axis is mostly affected with around 120 LSB drift when the temperature rises about 3.5 $^{\circ}C$.

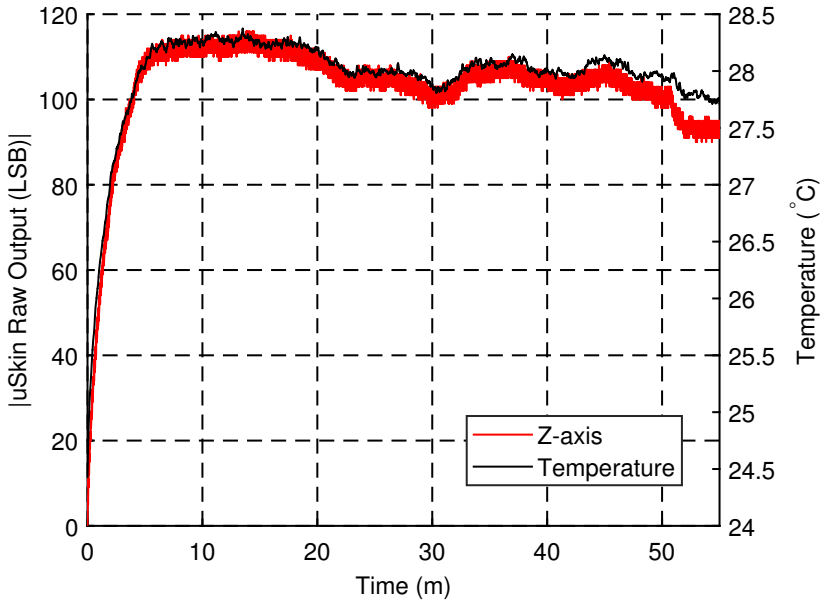

Figure 5:
Output fluctuation of uSkin (single taxel of S="H") due to temperature rise

To overcome this problem, uSkin sensor has a temperature compensation algorithm. The compensation result can be seen in Fig. 6.

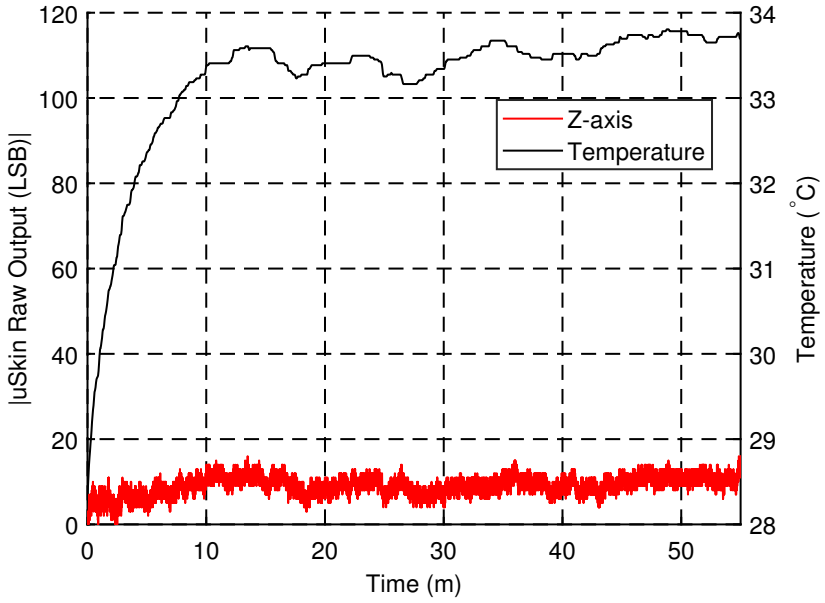

Figure 6:
Output of uSkin (single taxel) after compensation.

7 Hysteresis

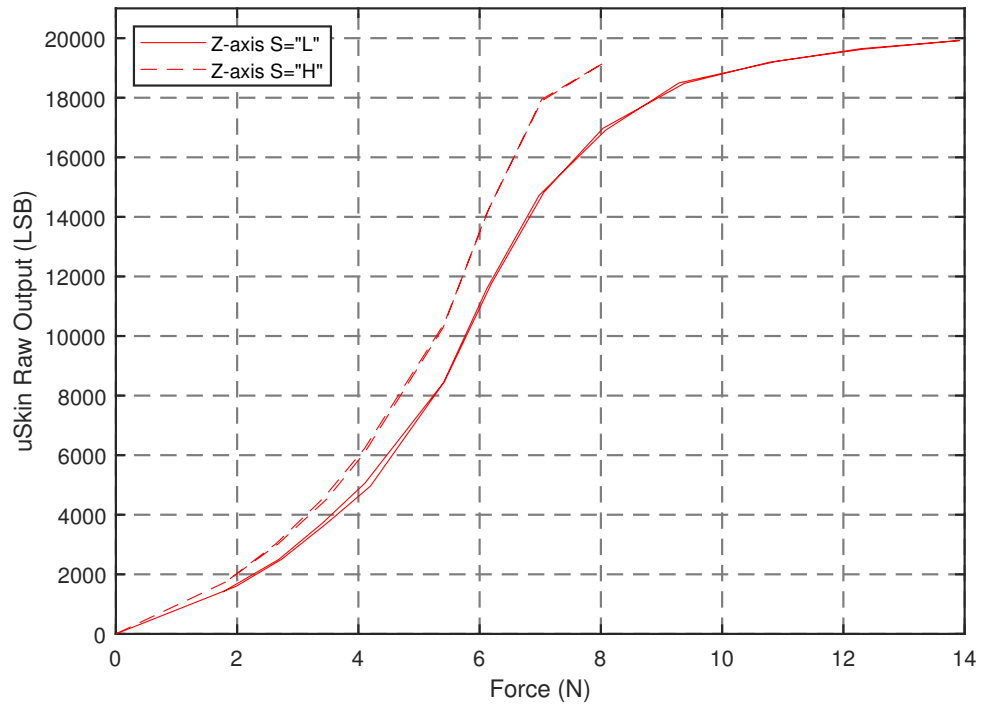

Figure 7:
uSPa11, uSPa21, and uSPa22 loading and unloading response (z-axis).

Figure 7 shows the output of uSkin when loaded and unloaded with 7 step-wise forces. Each step is about three seconds. The hysteresis value is measured by first calculating the difference of uSkin output during the loading and unloading cycles at the mid point of the maximum loading force. The absolute value of the difference then divided by the output of uSkin during the maximum loading force. The hysteresis value of the z-axis for sensitivity low and high are 0.88 and 0.77% respectively.

8 Calibration

Sensor calibration serves various critical purposes, including the enhancement of sensor characteristics to achieve greater linearity, the reduction of cross-talk between axes, the minimization of differences in sensor responses across individual taxels, and the conversion of sensor output from Least Significant Bits (LSB) to the Newton unit. For example, as illustrated in Figure 1, the steepness of the uSPa11, uSPa21, and uSPa22 (low sensitivity) sensor's response curve exhibits notable shifts at two forces: 4N and 8N of applied force.

In certain applications, such as those focused on basic shear force measurements, contact detection, or pattern generation for machine learning, the need for precise calibration is less critical. However, when precision is of importance, our sensor can be calibrated. XELA Robotics offers two distinct calibration options: standard and individual calibrations. The standard calibration is included with the sensor as a complimentary package. It involves the collection of data from multiple identical sensor models, followed by the computation of shared calibration parameters through advanced machine-learning techniques.

In contrast, individual calibration parameters are tailored exclusively for a specific sensor point. This individualized approach ensures a higher degree of calibration accuracy compared to the standard calibration parameters. Should you require individual calibration, we kindly encourage you to reach out to XELA Robotics for further details on associated fees and services.

9 Dimensions

The uSPa11 features a fully flat bottom surface, allowing direct mounting onto any flat surface. In contrast, the uSPa21 and uSPa22 models are equipped with cables positioned beneath the PCB. Mounting these models requires a custom base plate. The distance between each taxel is 4.7 mm. Moreover, users can customize the cable length to their specifications, with options ranging from 30 cm, 50 cm, to 90 cm, providing flexibility to meet various installation requirements.

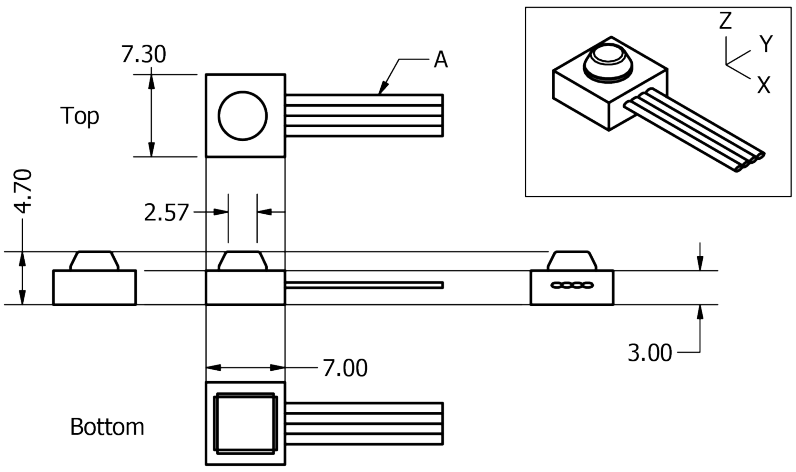

Figure 8:
uSPa11 drawing (units are in mm).

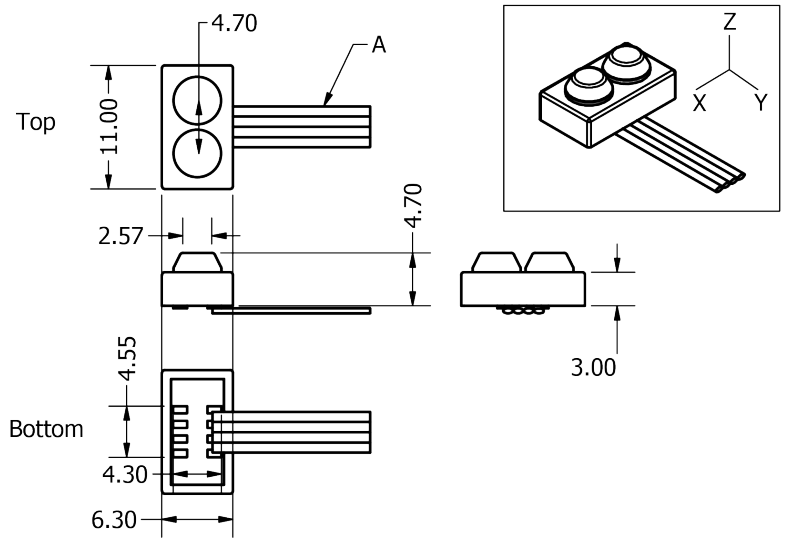

Figure 9:
uSPa21 drawing (units are in mm).

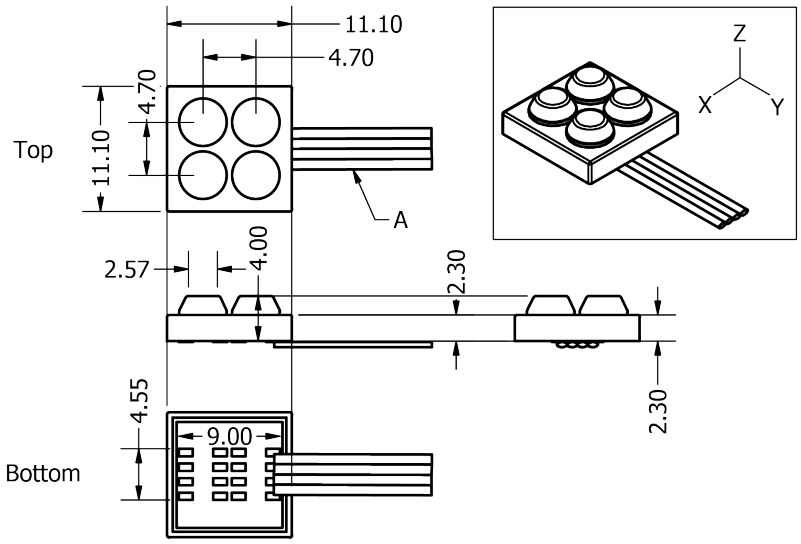

Figure 10:
uSPa22 drawing (units are in mm).